Worksheet 11-09-19

1. Two adjacent angles of a parallelogram are as 2 : 3. Find the measure of each of its angles.

2. ABCD is a parallelogram in which $\angle A = 75°$. Find the measure of each of the angles $\angle B$, $\angle C$ and $\angle D$.

3. The external angle of a regular polygon is 20^0. How many sides does it have ? What is the measure of each interior angle? What is the total measure of its angles.

4. Is it possible to have a regular polygon with measure of each exterior angle as 580 ? Why? can it be an interior angle of a regular polygon ?

5. Find the measure of each exterior angle of a (i) Regular octagon (ii) Regular Decagon

6. Find the perimeter of a parallelogram with sides 9cm and 5cm.

7. Find the perimeter of a rhombus whose diagonals are 16cm and 12cm

8. The adjacent angles of a parallelogram are in the ratio 5:4 . Find all the angles.

9. If one of the angles of a parallelogram is a right angle, prove that it is a rectangle.

10. If all the angles of a parallelogram are equal. Prove that it is a rectangle.

11. Find the length of the diagonal of a rectangle whose length is 15cm and breadth is 8cm.

12. The measure of two adjacent angles of a quadrilateral are 1100 and 500 and the other two acute angles are equal. Find the measure of each angle.

13. The five angles of a pentagon are in the ratio 5 : 6 : 7: 8 :10. Find all the angles.

14. GOAL is a quadrilateral in which GO || AL. If $\angle G = \angle O = 40^0$. What are the measures of $\angle A$ and $\angle L$.

15. ABCD is a rhombus whose diagonals AC and BD intersect at a point O. If side AB = 10cm and diagonal BD = 16 cm, find the length of diagonal AC.

16. One of the diagonals of a rhombus is equal to one of its sides. Find the angles of the rhombus.

17. The diagonals of a rhombus ABCD intersect at O. If $\angle ADC = 120°$ and OD = 6 cm, find (i) OAD (ii) side AB (iii) perimeter of the rhombus ABCD.

18. ABCD is a trapezium where AB parallel to CD. measure of $\angle A = \angle B = 45^0$. Prove that AD=BC.

19. Three angles of a quadrilateral are in the ratio 3:4:5. The difference of the least and the greatest of these angles is 45. Find all the four angles of the quadrilateral

20. In the below figure, ABCD is a quadrilateral. Find x.

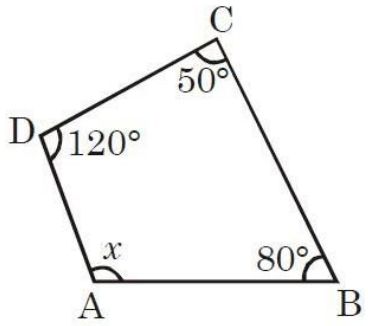

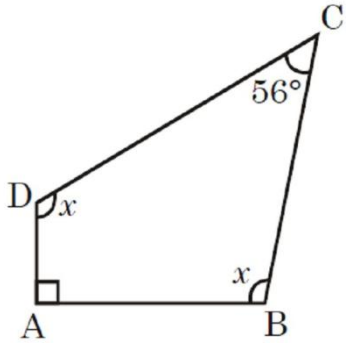

13-09-19.

1. In the above right sided figure, ABCD is a quadrilateral. Find x.

2. In the below figure. Find *x*.

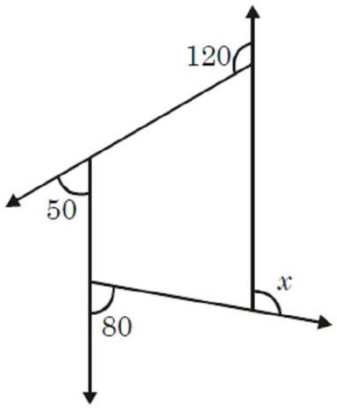

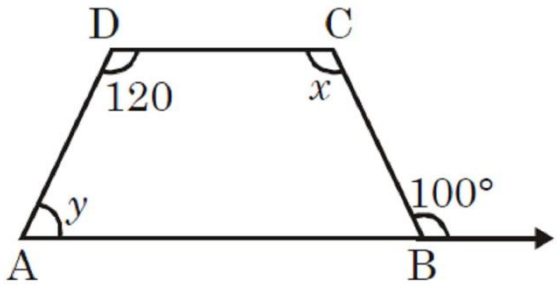

3. In the above right sided figure, ABCD is a quadrilateral in which AB||CD. Find x and y.

4. In the below figure, find x

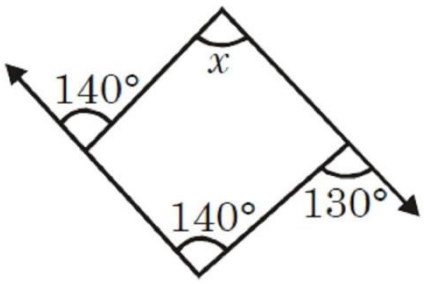

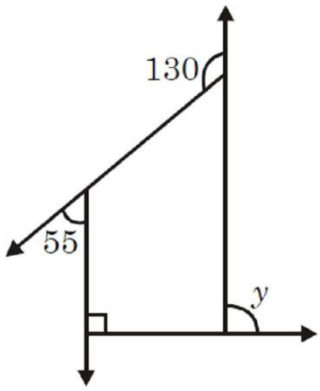

5. In the above right sided figure, find the value of y.

6. What is the measure of each exterior angle of a regular polygon of 10 sides?

7. How many sides does a regular polygon has if each of its interior angle is 160°?

8. If the total angle sum of a polygon is 108° then how many sides does polygon has?

9. *ABCD* is a parallelogram. The perimeter is 144 cm and *BC* = 20 cm then find *AB.*

10. The ratio of two adjacent sides of a parallelogram is 5:4. Its perimeter is 18 cm then, what is the

length of the adjacent sides.

14-9-19

1. Below pie chart gives the expenditure (in percentage) on various items and savings of a family during a month.
(i) On which item, the expenditure was maximum?
(ii) Expenditure on which item is equal to the total savings of the family?
(iii) If the monthly savings of the family is Rs 3000, what is the monthly expenditure on clothes?

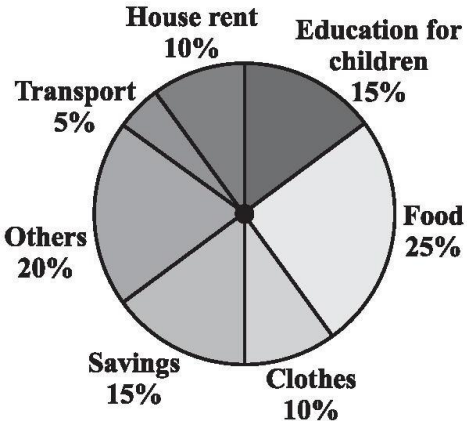

2. On a particular day, the sales (in rupees) of different items of a baker's shop are given below. Draw a pie chart for this data.

ordinary bread	: 320
fruit bread	: 80
cakes and pastries	: 160
biscuits	: 120
others	: 40
Total	**: 720**

3. Draw a pie chart of the data given below. The time spent by a child during a day.

Sleep	—	8 hours
School	—	6 hours
Home work	—	4 hours
Play	—	4 hours
Others	—	2 hours

Season	No. of votes
Summer 	90
Rainy 	120
Winter 	150

4. A group of 360 people were asked to vote for their favourite season from the three seasons rainy, winter and summer(shown in above fig.). (i) Which season got the most votes? (ii) Find the central angle of each sector. (iii) Draw a pie chart to show this information.

5. The number of students in a hostel, speaking different languages is given below. Display the data in a pie chart.

Language	Hindi	English	Marathi	Tamil	Bengali	Total
No. of Students	40	12	9	7	4	72

6. The adjoining pie chart gives the marks scored in an examination by a student in Hindi, English, Mathematics, Social Science and Science. If the total marks obtained by the students were 540, answer the following questions.

(i) In which subject did the student score 105 marks?

(ii) How many more marks were obtained by the student in Mathematics than in Hindi?

(iii) Examine whether the sum of the marks obtained in Social Science and Mathematics is more than that in Science and Hindi.

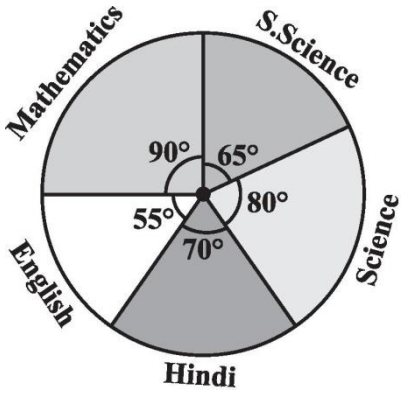

7. A box contains 3 blue, 2 white, and 4 red marbles. If a marble is drawn at *random* from the box, what is the probability that it will be (i) white? (ii) blue? (iii) red?

8. A die is thrown once. Find the probability of getting (i) a prime number; (ii) a number lying between 2 and 6; (iii) an odd number.

9. A bag contains 3 red balls and 5 black balls. A ball is drawn at random from the bag. What is the probability that the ball drawn is (i) red ? (ii) not red?

10. A box contains 5 red marbles, 8 white marbles and 4 green marbles. One marble is taken out of the box at random. What is the probability that the marble taken out will be (i) red ? (ii) white ?

(ii) not green?

11. A bag has 4 red balls and 2 yellow balls. A ball is drawn from the bag without looking into the bag. What is probability of getting a red ball?

12. Cards are marked with numbers 1 to 25 are placed in the box and mixed thoroughly. One card is drawn at random from the box. What is the probability that the cards are marked with (i) a prime number (ii) an even number (iii) a number multiple of 5 (iv) a number divisible by 6 and (v) a number 4.

13. When a die is thrown, list the outcomes of an event of getting (i) (a) a prime number (b) not a prime number. (ii) (a) a number greater than 5 (b) a number not greater than 5.

14. Numbers 1 to 10 are written on ten separate slips (one number on one slip), kept in a box and mixed well. One slip is chosen from the box without looking into it. What is the probability of .

(i) getting a number 6?

(ii) getting a number less than 6?

(iii) getting a number greater than 6?
(iv) getting a 1-digit number?
15-9-19

1. Find the least number by which 200 must be multiplied to make it a perfect square.

2. Find the least number by which 384 must be divided to make it a perfect square

3. Find the square root of 529 using long division method.

4. Find the square root of 6.0516 Find the least number, which must be subtracted from 3250 to make it a perfect square

5. Find the least number, which must be added to 1825 to make it a perfect square

6. Find the square root of 3 correct to two places of decimal.

7. Find the length of the side of a square where area is 441 m^2.

1. Find the cube root of 8000.

2. Find the cube root of 13824 by prime factorisation method.

3. Find the cube root of 17576 through estimation.

4. You are told that 1,331 is a perfect cube. Can you guess without factorisation what is its cube root? Similarly, guess the cube roots of 4913, 12167, 32768.

5. Find the cube root of each of the following numbers by prime factorisation method. (i) 64 (ii) 512 (iii) 10648 (iv) 27000 (v) 15625 (vi) 13824
(vii) 110592 (viii) 46656 (ix) 175616 (x) 91125

6. Evaluate: $\sqrt[3]{\frac{216}{2197}}$.

7. Evaluate: $\sqrt[3]{\frac{-125}{512}}$.

19. Evaluate: $\sqrt[3]{\frac{-1728}{2744}}$.

20. Evaluate: $\sqrt[3]{64 \times 729}$